WC 2430
WC 2730
WC 3030
WC 3330
WC 3630

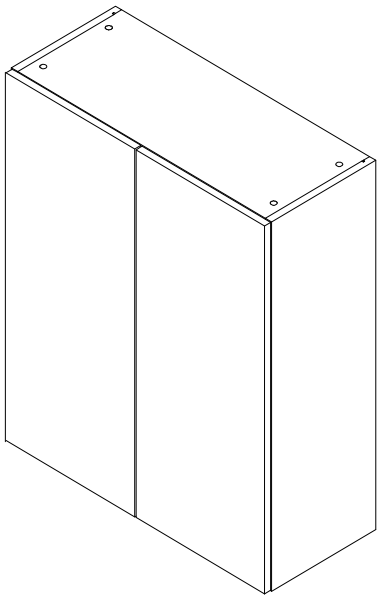

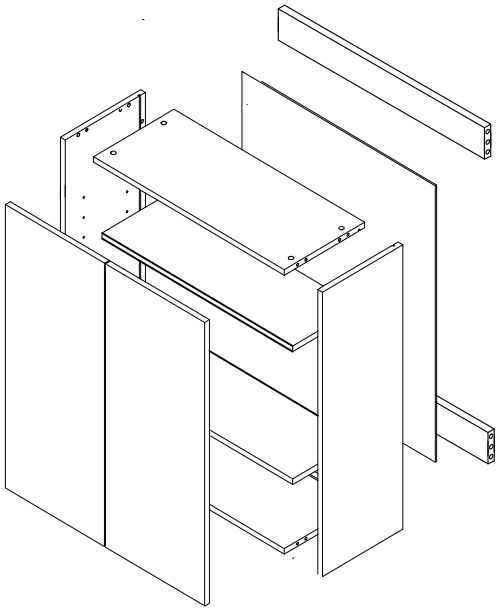

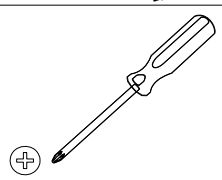

Tools required

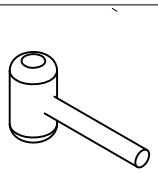

Tools required

Assembly instructions

- Carefully read the instructions before starting the installation.
- During assembly, please follow all generally accepted safety procedures.
- Check that all appropriate and required plumbing and electrical connections exist.

If you are missing any part, please stop and contact us immediatly at:
1-800-222-4638 opt.5

CABINETS TO GO!
1-800-CABINET

Hardware Bag

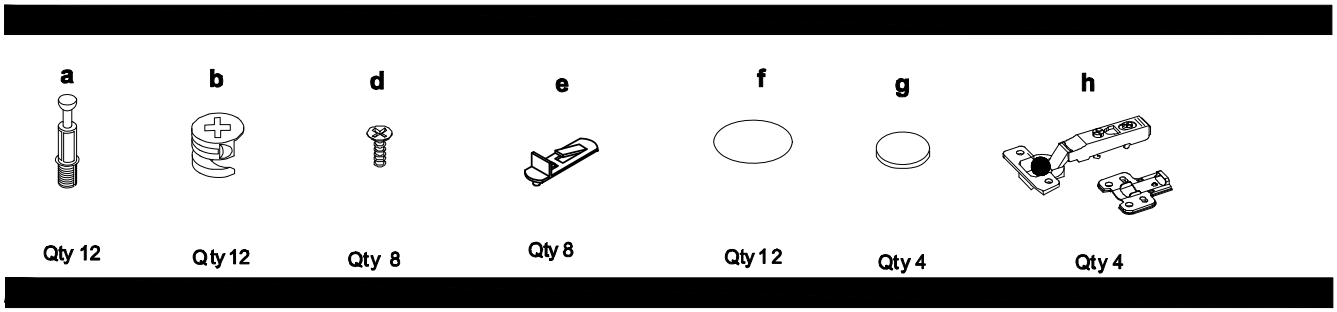

Cabinet Parts Detail

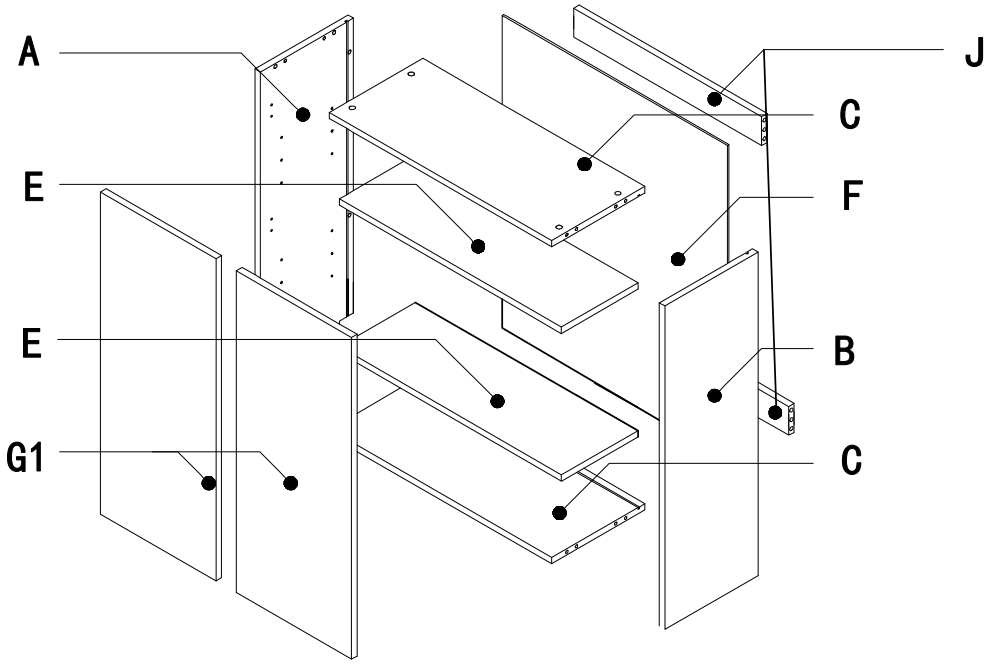

NO.	Item
B	side panel (right)
A	side panel (left)
C	Top&Bottom(panel)
F	back panel
E	shelf
G1	door
J	Top back bar

How to seperate each parts?
if you can not find each parts by the structure drawing, pls use the following size for reference

W2430

NO.	Item	Size	Qty
B	side panel (right)	30"*12"*$\frac{3}{4}$"	1
A	side panel (left)	30"*12"*$\frac{3}{4}$"	1
C	Top&Bottom(panel)	22 $\frac{5}{8}$"*12"*$\frac{3}{4}$"	2
F	back panel	29"*23"*$\frac{1}{4}$"	1
E	shelf	22 $\frac{5}{16}$"*10 $\frac{5}{8}$"*$\frac{3}{4}$"	2
G1	door	29 $\frac{7}{8}$"*11 $\frac{7}{8}$"*$\frac{3}{4}$"	2
J	Top back bar	22 $\frac{5}{8}$"*3"*$\frac{3}{4}$"	2

W2730

NO.	Item	Size	Qty
B	side panel (right)	30"*12"*$\frac{3}{4}$"	1
A	side panel (left)	30"*12"*$\frac{3}{4}$"	1
C	Top&Bottom(panel)	25 $\frac{9}{16}$"*12"*$\frac{3}{4}$"	2
F	back panel	29"*26"*$\frac{1}{4}$"	1
E	shelf	25 $\frac{5}{16}$"*10 $\frac{5}{8}$"*$\frac{3}{4}$"	2
G1	door	29 $\frac{7}{8}$"*13 $\frac{6}{16}$"*$\frac{3}{4}$"	2
J	Top back bar	25 $\frac{9}{16}$"*3"*$\frac{3}{4}$"	2

W3030

NO.	Item	Size	Qty
B	side panel (right)	30"*12"*$\frac{3}{4}$"	1
A	side panel (left)	30"*12"*$\frac{3}{4}$"	1
C	Top&Bottom(panel)	28 $\frac{9}{16}$"*12"*$\frac{3}{4}$"	2
F	back panel	29"*29"*$\frac{1}{4}$"	1
E	shelf	28 $\frac{5}{16}$"*10 $\frac{5}{8}$"*$\frac{3}{4}$"	2
G1	door	29 $\frac{7}{8}$"*14 $\frac{7}{8}$"*$\frac{3}{4}$"	2
J	Top back bar	28 $\frac{9}{16}$"*3"*$\frac{3}{4}$"	2

W3330

NO.	Item	Size	Qty
B	side panel (right)	30"*12"*$\frac{3}{4}$"	1
A	side panel (left)	30"*12"*$\frac{3}{4}$"	1
C	Top&Bottom(panel)	31 $\frac{9}{16}$"*12"*$\frac{3}{4}$"	2
F	back panel	29"*31 $\frac{15}{16}$"*$\frac{1}{4}$"	1
E	shelf	31 $\frac{5}{16}$"*10 $\frac{5}{8}$"*$\frac{3}{4}$"	2
G1	door	29 $\frac{7}{8}$"*16 $\frac{6}{16}$"*$\frac{3}{4}$"	2
J	Top back bar	31 $\frac{9}{16}$"*3"*$\frac{3}{4}$"	2

W3630

NO.	Item	Size	Qty
B	side panel (right)	30"*12"*$\frac{3}{4}$"	1
A	side panel (left)	30"*12"*$\frac{3}{4}$"	1
C	Top&Bottom(panel)	34 $\frac{9}{16}$"*12"*$\frac{3}{4}$"	2
F	back panel	29"*34 $\frac{15}{16}$"*$\frac{1}{4}$"	1
E	shelf	34 $\frac{5}{16}$"*10 $\frac{5}{8}$"*$\frac{3}{4}$"	3
G1	door	29 $\frac{7}{8}$"*17 $\frac{7}{8}$"*$\frac{3}{4}$"	2
J	Top back bar	34 $\frac{9}{16}$"*3"*$\frac{3}{4}$"	2

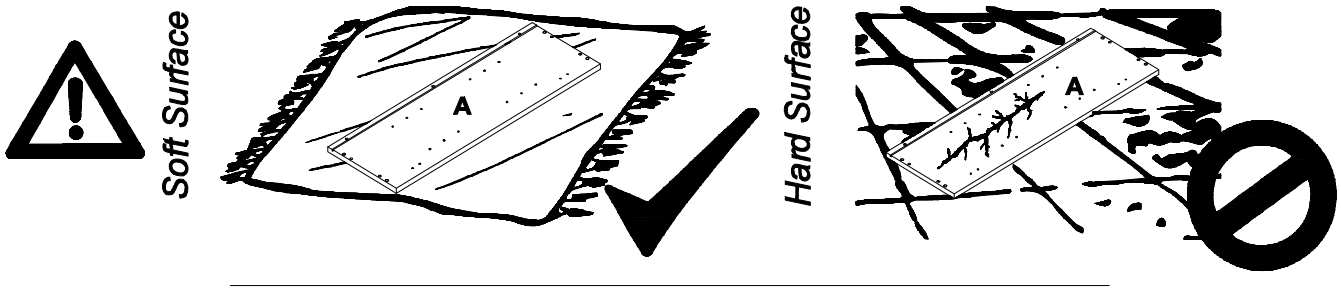

1

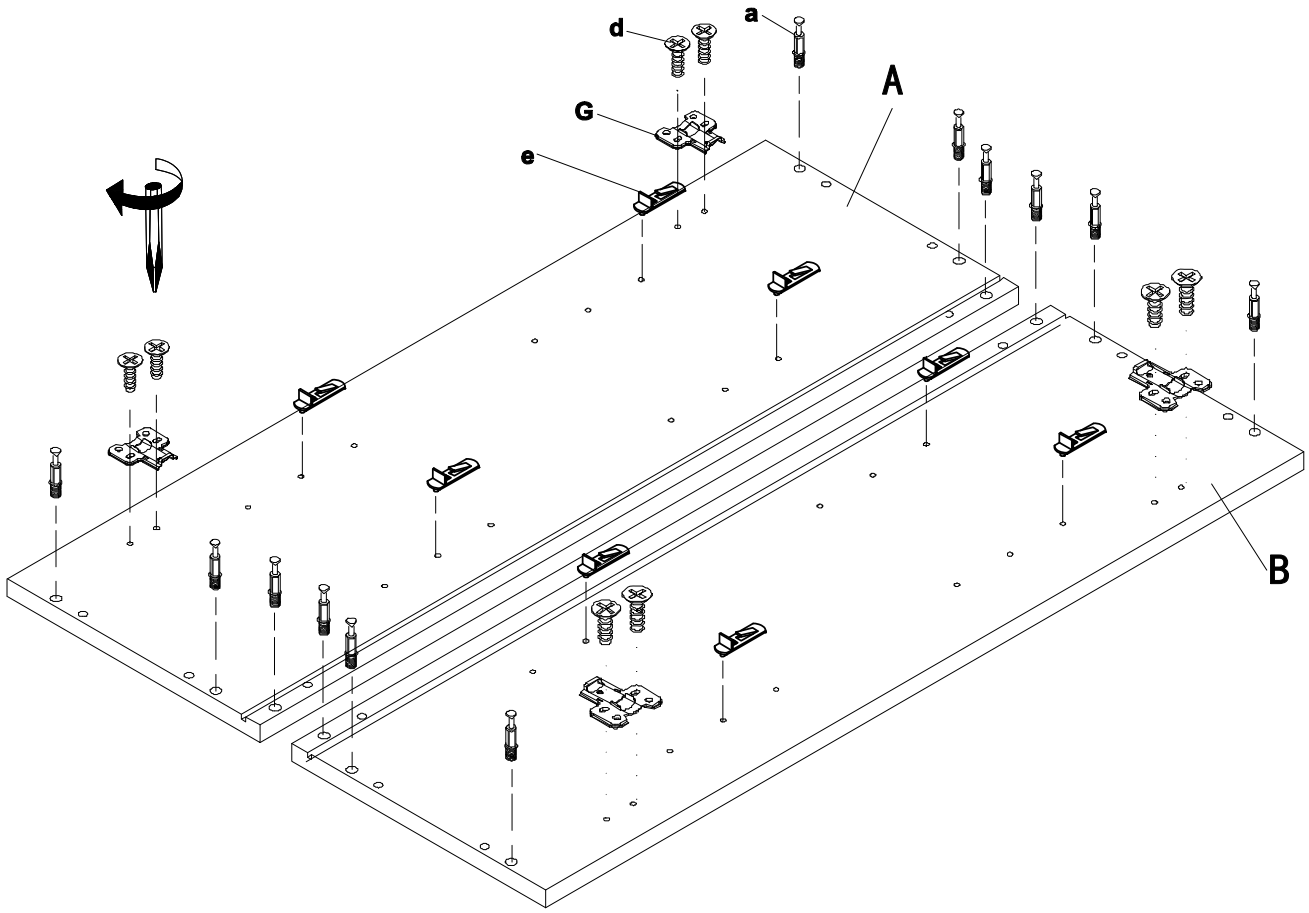

2

12x b

12xf

1x B

2x C

2x J

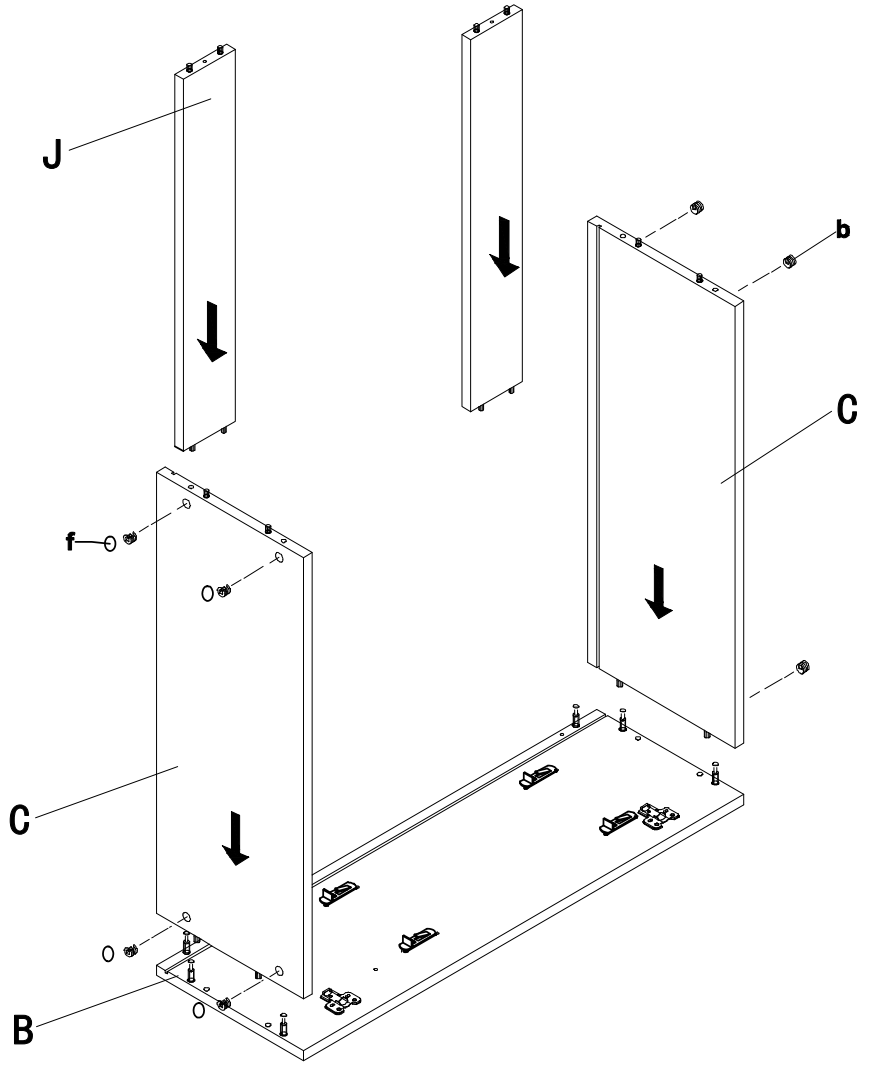

3

1x A

1x F

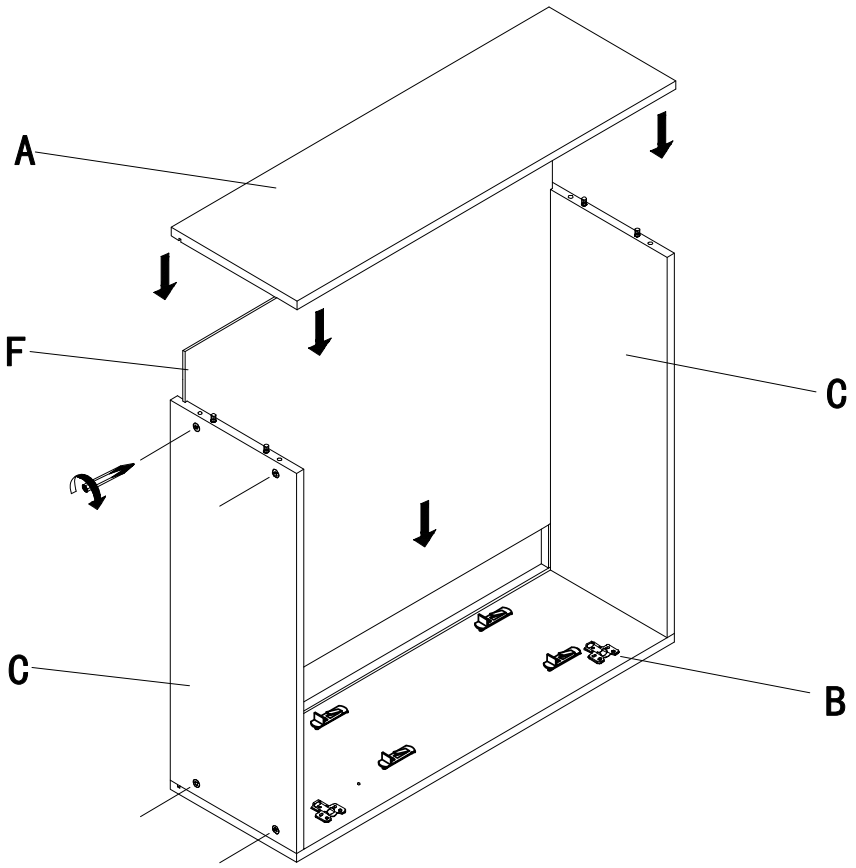

4

4x h

4x g

2x G1

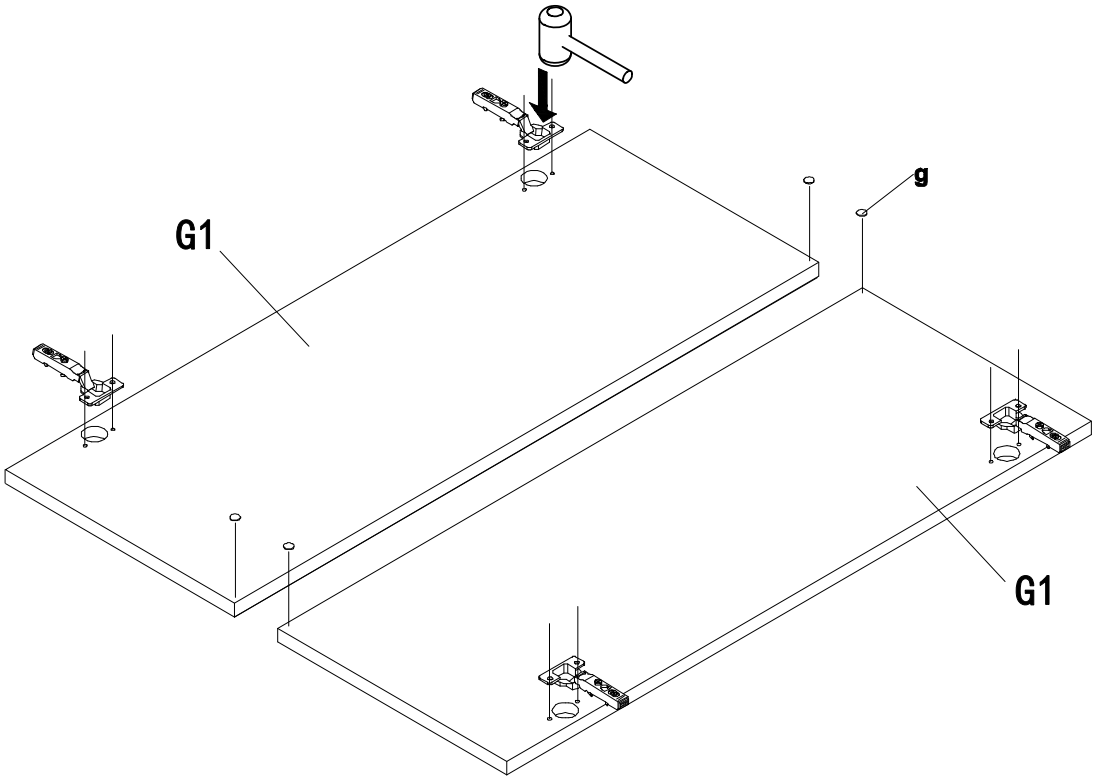

5

2x G1

2x E

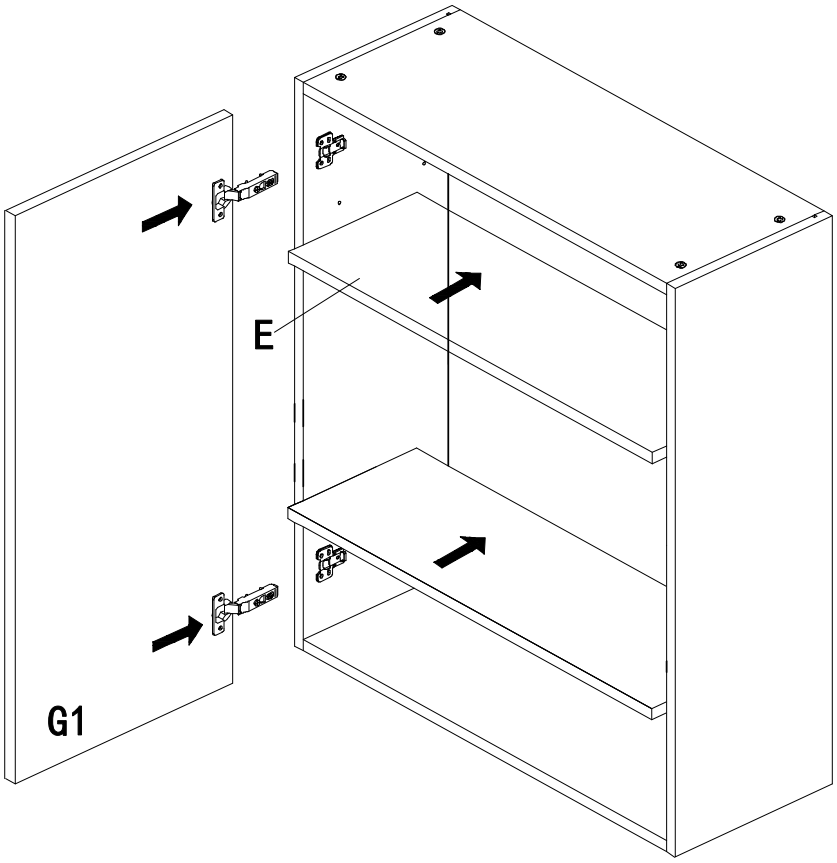

Maintenance

- ✓ For daily cleaning, use a dry cloth and a soft liquid cleaner.
- ✓ Never use abrasive cleaners containing chrome, acetone, chlorine or strong bleach. Do not use tools as scrapers, metallic brushes, and other products which can scratch or tarnish surfaces.
- ✓ Good ventilation is essential for maintaining the quality and look of this furniture.

Limited 30 year warranty

- ► This warranty applies to ROBERTO FIORE kitchen cabinets installed for residential use. ROBERTO FIORE warrants that, when installed in accordance with the installation instructions provided, the kitchen cabinets are free of manufacturing defects for a period of (30) thirty years from the date of purchase.
- ► We guarantee your satisfaction with each kitchen cabinet. Should any kitchen cabinet not meet your satisfaction because of a visual defect, simply return it to your retailer, PRIOR to installation for a replacement. We are unable to correct any visual defects after installation is complete or after 5 days from the date of original delivery.

Information about your warranty coverage

Materials used in the manufacturing of the cabinets are sensitive to temperature and humidity variations. Cabinets must be installed in an environment where there is constant humidity and temperature control. The temperature must be between 16 degree Celsius and 26 degree Celsius with a humidity rate between 45% and 55%. As with any wood product, when humidity is low, cracking and center panel shrinkage may occur.

This warranty does not cover damages or failure attributable to:

- ► Kitchen cabinets installed with obvious visual defects.
- ► Defects or damage to kitchen cabinets caused by installation that does not comply strictly with the instructions provided with the kitchen cabinets.
- ► Issues related to the natural characteristics of wood products or the normal effects of aging.
- ► Defects caused by product modifications completed by the owner/installer.
- ► The variation of color over time due to sunlight, cleaning products and other environmental conditions.
- ► The variation in color and wood grain due to the nature of the product.
- ► Micro cracks due to the humidity and temperature variations.
- ► Defects caused by exposure to the elements including moisture which may cause warping or splitting.
- ► Defects or damage to kitchen cabinets caused by severe accidents (e.g. fire, burns).
- ► Damage caused by flooding or standing water from leaking pipes, faucets, household appliances, etc: up to and including flooding and any damages caused by natural catastrophes.

Notes on Warranty

- ► ROBERTO FIORE kitchen cabinets shall not be liable for either its failure to perform or its delays in performance hereunder arising out of or resulting from causes beyond its control, including but not limited to, acts of God, acts of Representatives, acts of Government, wars, fires, floods, epidemics, quarantine, strike, freight embargoes, weather or default by suppliers due to any such causes.
- ► This warranty applies only to the original purchaser and installation site and is not transferable.
- ► Wood characteristics naturally occurring such as variations in color, grain and knots are not considered defects.
- ► Color variations in cabinets are a natural occurrence due to wood species, age and exposure to UV light and sunlight and therefore such variations and changes are not considered defects.
- ► This warranty is valid only for residential installation.

FOR WARRANTY SERVICE

- ✓ To make a claim, contact CABINETS TO GO, acting as an agent for ROBERTO FIORE, no later than 5 days following the date of receipt of product, at 1-800-CABINET opt.5. Proof of purchase, such as the bill of sale is mandatory when requesting warranty service.
- ✓ Approved Returns are subject to a 25% restocking fee & must be approved prior to return, contact your local store for authorization.
- ✓ Product must be in original condition & properly stored. Installed product is considered accepted by the buyer & may not be returned or exchanged for any reason.
- ✓ CABINETS TO GO reserves the right to designate a representative to inspect the kitchen cabinet for analysis.
- ✓ No unauthorized person, installer, dealer, agent or employee of CABINETS TO GO or any other representative is entitled to assume any liability on behalf of CABINETS TO GO relating to the sale of this product or has the authority to increase or alter the obligations or limitations of this warranty.

THE SOLE REMEDY PROVIDED BY THIS WARRANTY IS THE REPAIR OR REPLACEMENT OF ANY PART OR PARTS THAT MAY PROVE DEFFECTIVE UNDER NORMAL RESIDENTIAL USAGE. THIS WARRANTY DOES NOT COVER THE COST OF REMOVAL, INSTALLATION, DELAY OR TRANSPORTATION OF NEW PRODUCT.

CABINETS TO GO!
1-800-CABINET